F-Mount

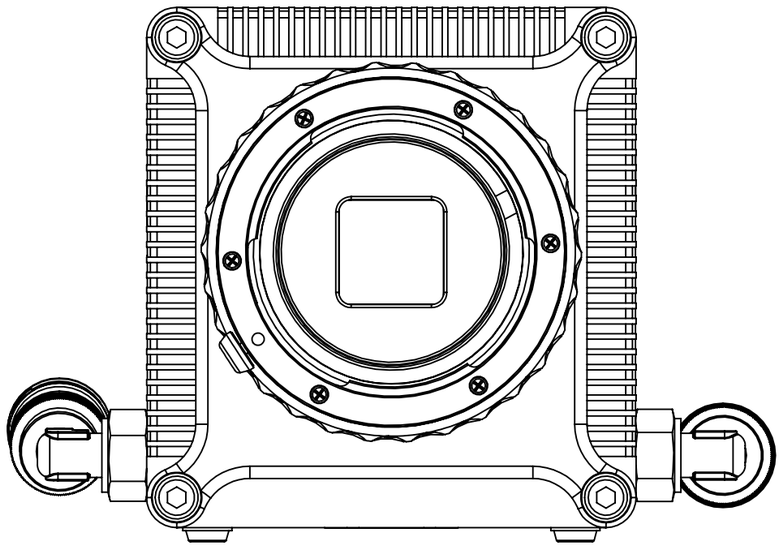

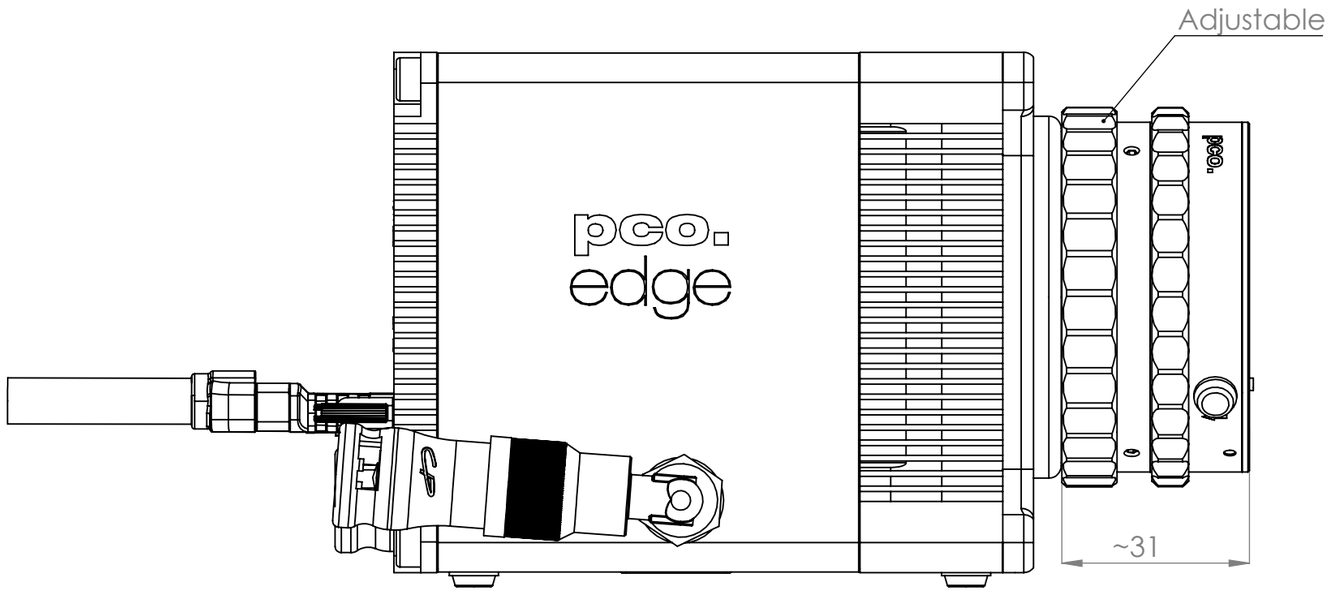

C-Mount

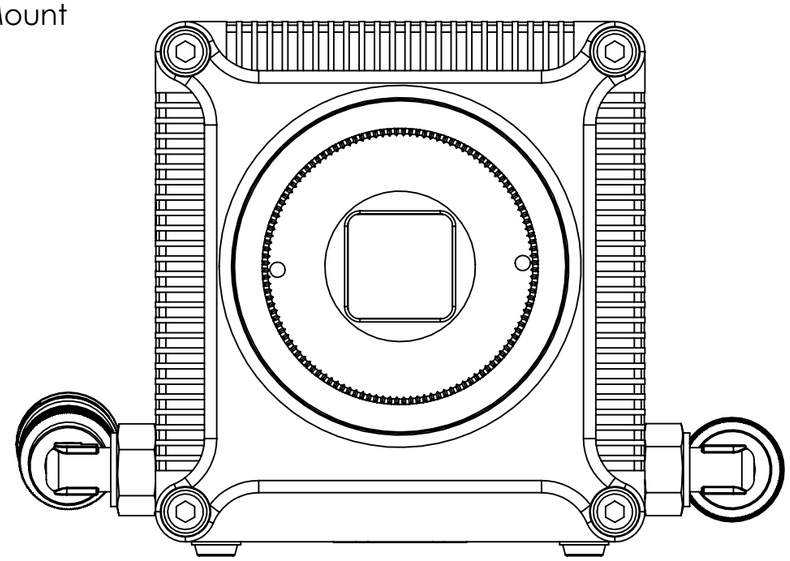

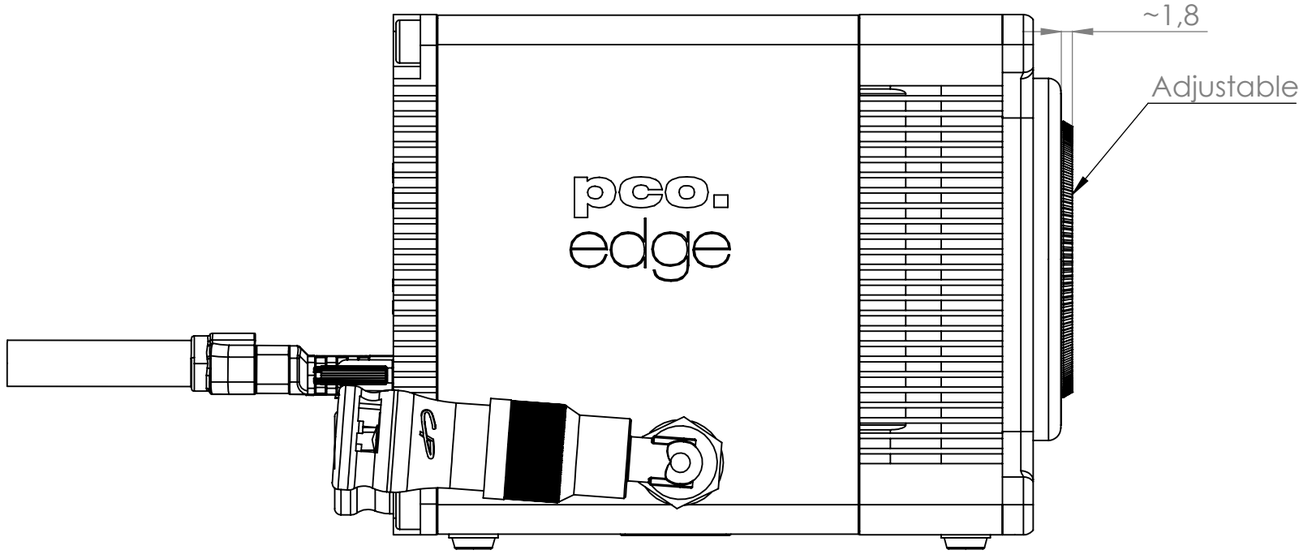

pco.
www.pco.de

PCO AG
Donaupark 11
93309 Kelheim, Germany
+49 (0)9441 2005 0
info@pco.de

scale 1:1

This drawing is the property of PCO AG and must not be reproduced either wholly or partly. All rights in respect of patents, designs and copyrights are reserved. © 2018

camera: pco.edge
model: 26

size A3

all dimensions in mm

rev.: 1.00 **date:** 06.08.2019

Sheet 1/3

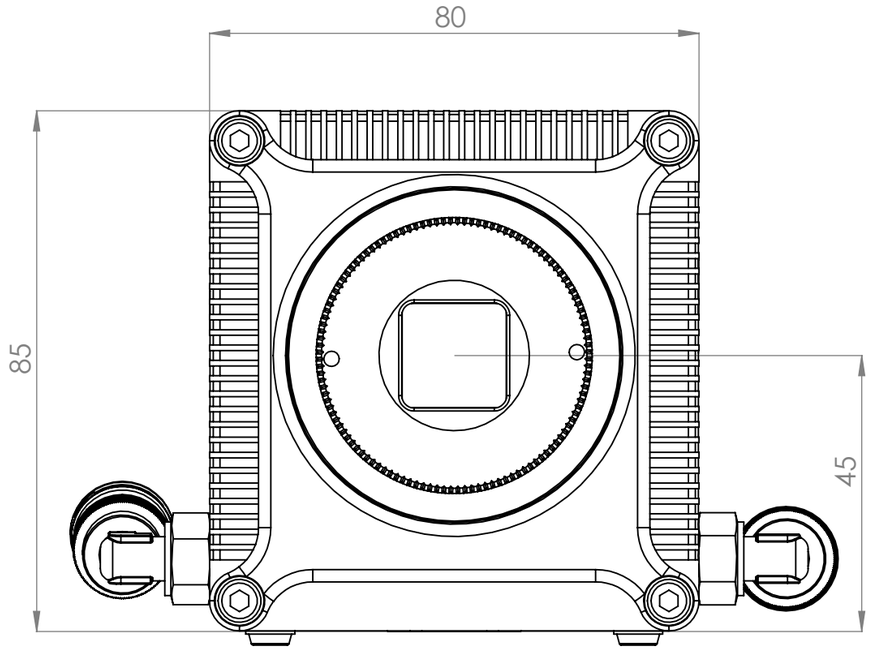

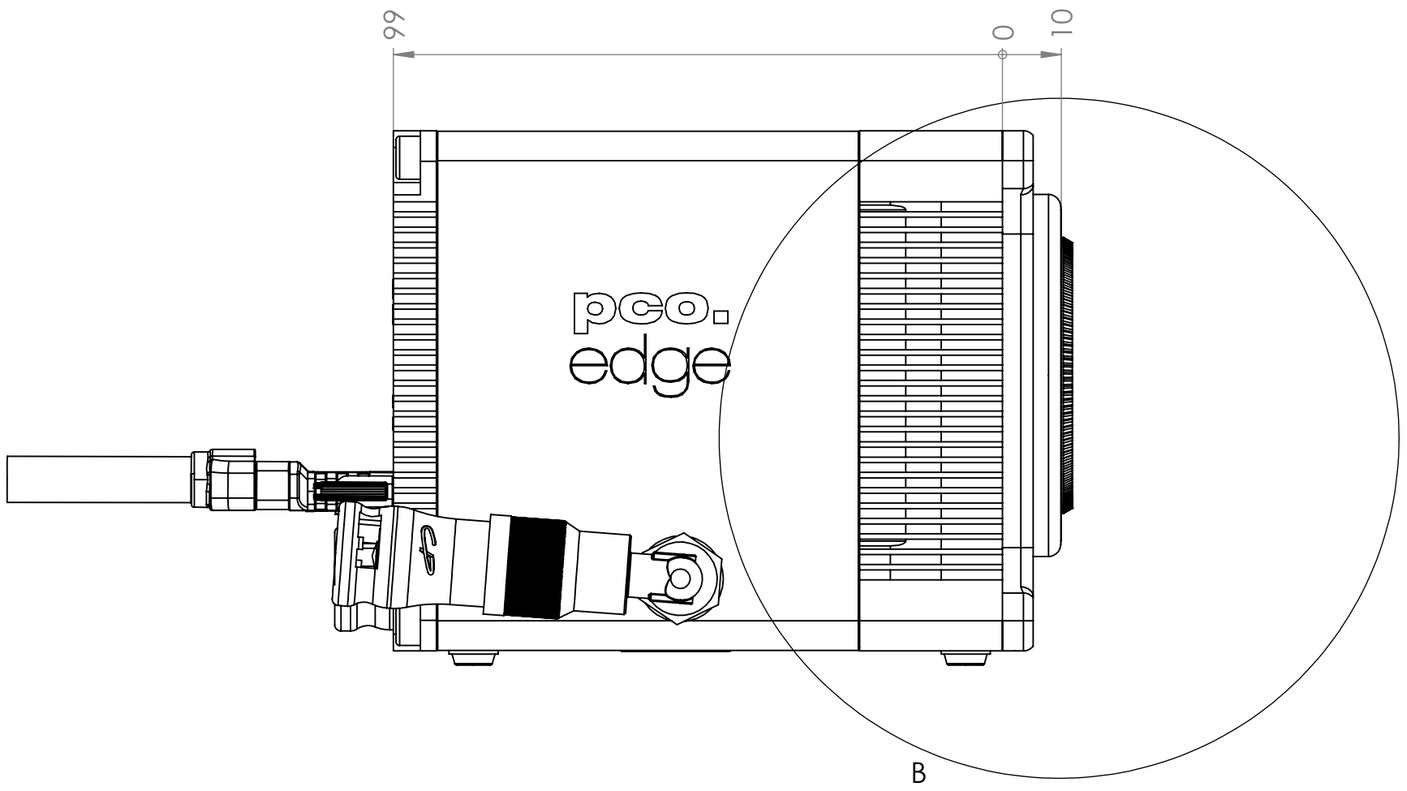

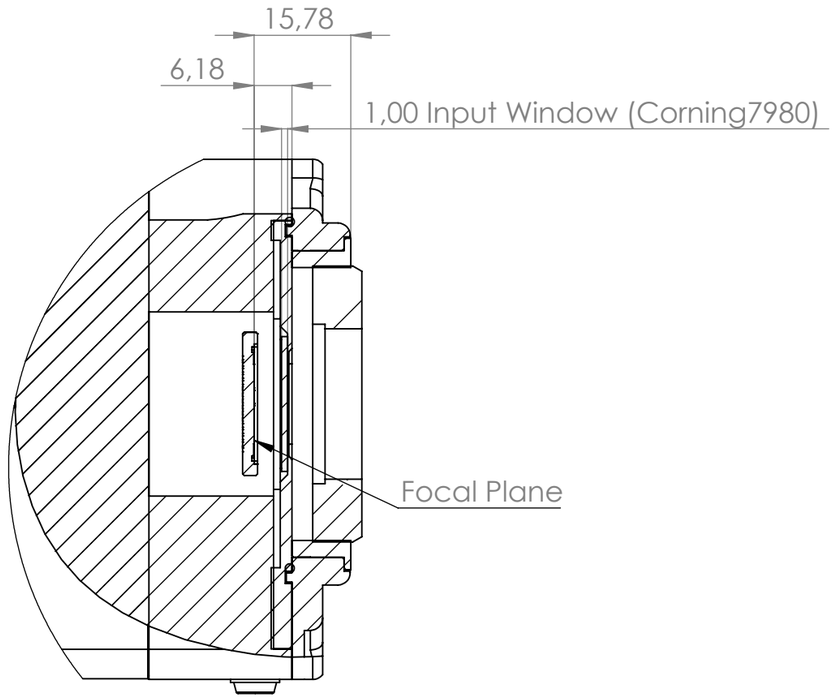

DETAIL B

pco. www.pco.de	PCO AG Donaupark 11 93309 Kelheim, Germany +49 (0)9441 2005 0 info@pco.de	scale 1:1	This drawing is the property of PCO AG and must not be reproduced either wholly or partly. All rights in respect of patents, designs and copyrights are reserved. © 2018
			camera: pco.edge model: 26
		size A3	
		all dimensions in mm	**rev.:** 1.00 **date:** 06.08.2019
			Sheet 2/3

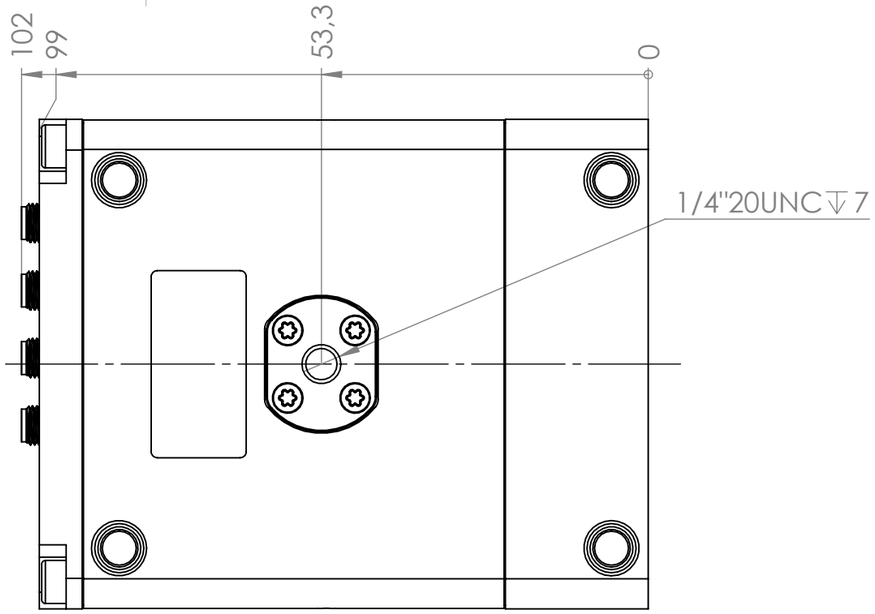

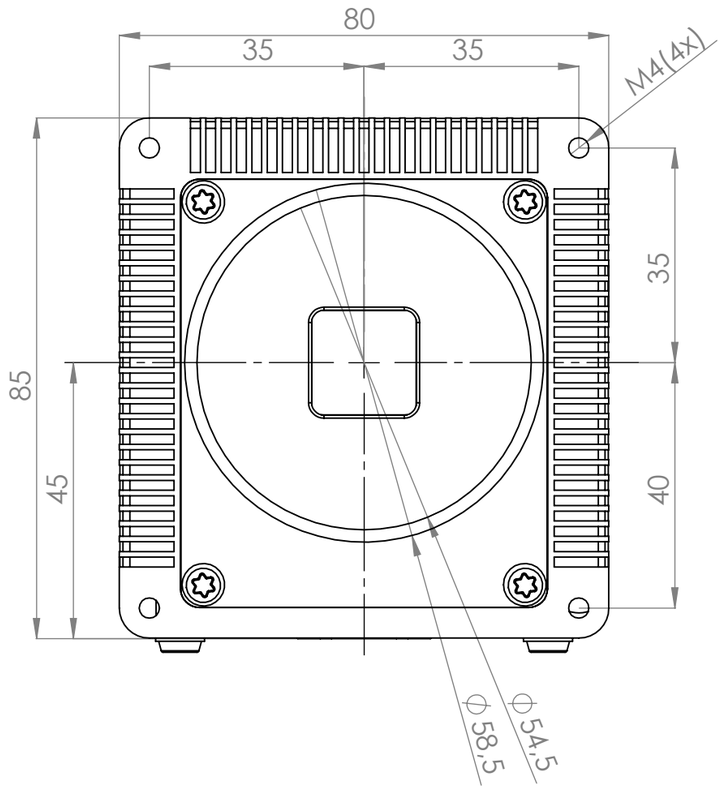

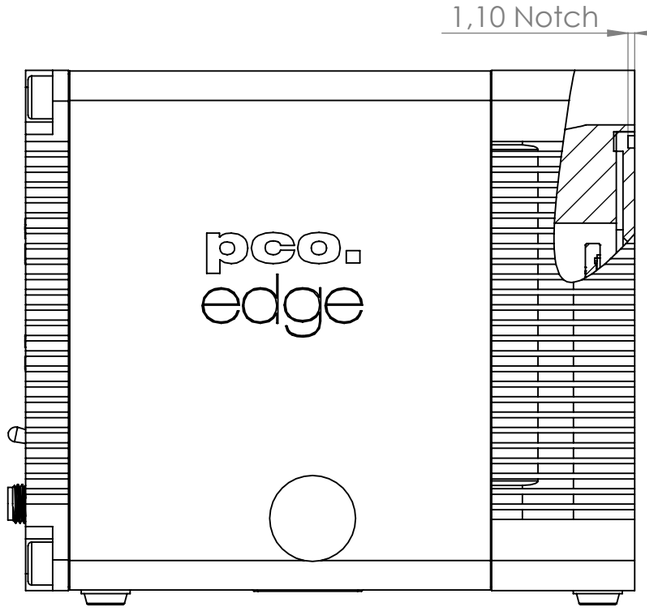

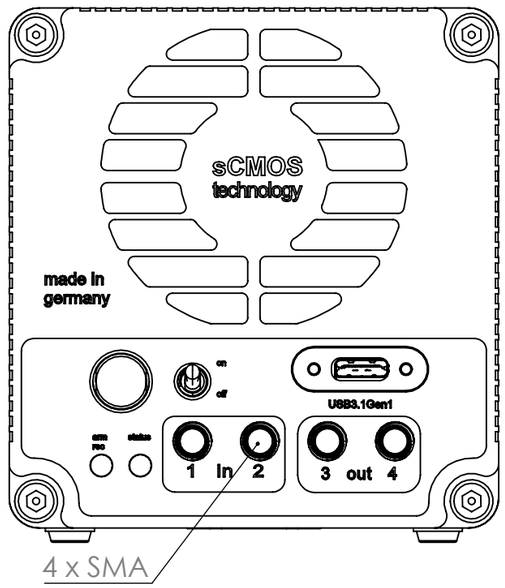

pco. www.pco.de	PCO AG Donaupark 11 93309 Kelheim, Germany +49 (0)9441 2005 0 info@pco.de		scale 1:1	This drawing is the property of PCO AG and must not be reproduced either wholly or partly. All rights in respect of patents, designs and copyrights are reserved. © 2018
				camera: pco.edge model: 26
		size A3		
		all dimensions in mm		**rev.:** 1.00 **date:** 06.08.2019